DC/DC Converter

PFD20-XXSXXA3(-C)2(-T)(-TS) Series

Product Typical Features

- Wide input voltage range (4:1), Output Power 20W
- Transfer Efficiency up to 91%
- Stand-by Power Consumption as low as 0.1W
- Output super-fast start up
- Continuous Short Circuit protection, Self-recovery
- Input under voltage, output over voltage, short circuit, over current protection
- Switching Frequency 280KHz
- Isolation Voltage 1500VDC
- Operating Temperature: -40°C~+85°C
- Good EMI performance
- International standard pin-out

Application Field

PFD20-XXSXXA3(C)2 *is a newly designed DIP 1X1 packed 20W output power, ultra wide input range 4:1, low stand-by power consumption, isolated regulated output DC-DC converter, could be widely used for industrial control, instrument, communication, power electricity, internet of things field. For harsh EMC environment, the application circuit in the datasheet is strongly recommended.*

Typical Product List

Certificate	Part no.	Input Voltage Range (VDC)		Output Voltage/Current (Vo/Io)		Input Current (mA) (Nominal Voltage)		Max. Capacitive Load	Ripple & Noise		Efficiency (%)@output full load	
		Nominal	Range	Voltage (VDC)	Current(mA) MAX./Min	Full load typ.	No Load typ.	uF	mVp-p Typ.	mVp-p Max.	Min	Typ
-	PFD20-18S3V3A3(C)	24	9-36	3.3	5000/0	781	33	10000	50	100	86	88
-	PFD20-18S05A3(C)	24	9-36	5	4000/0	926	33	5000	50	100	88	90
-	PFD20-18S09A3(C)	24	9-36	9	2222/0	926	33	3000	50	100	88	90
-	PFD20-18S12A3(C)	24	9-36	12	1667/0	926	5	1000	50	100	88	90
-	PFD20-18S15A3(C)	24	9-36	15	1333/0	926	5	800	50	100	88	90
-	PFD20-18S24A3(C)	24	9-36	24	833/0	915	5	500	50	100	89	91
-	PFD20-36S3V3A3(C)	48	18-75	3.3	5000/0	390	17	10000	50	100	86	88
-	PFD20-36S05A3(C)	48	18-75	5	4000/0	463	17	5000	50	100	88	90

Guangzhou Aipu Electron Technology Co., Ltd Add: Building 4, HEDY Park, No.63, Punan Road, Huangpu Dist, Guangzhou, CN.
Email: market@aipu-elec.com Tel: 86-20-84206763 Fax: 86-20-84206762 HOTLINE: 400-811-8032 Website: http://aipulnion-power.com/
Guangzhou Aipu Electron Technology Co., Ltd reserves the copyright and right of final interpretation.

-	PFD20-36S09A3(C)	48	18-75	9	2222/0	463	17	3000	50	100	88	90
-	PFD20-36S12A3(C)	48	18-75	12	1667/0	457	5	1000	50	100	88	91
-	PFD20-36S15A3(C)	48	18-75	15	1333/0	457	5	800	50	100	88	91
-	PFD20-36S24A3(C)	48	18-75	24	833/0	457	5	500	50	100	88	91

Note 1: “R” is with control pin and adjustment pin together, ”C” is for control function only, ”-T” for adjustment function, no suffix mean no extra functions;

Note 2: Suffix “-H” is with heatsink, “-TH” for chassis mounting with heatsink,”-TSH” for DIN-Rail mounting with heatsink, DIN-Rail width is: 35mm;

Note 3: Max capacitive load is, when the power supply is fully loaded, the max capacity could be connected to output, if exceed, the power supply cannot start-up;

Note 4: To reduce no load power consumption and improve efficiency of light-load, IC will be flitter frequency under no-load and light-load operating, output cannot be no load, at least with 10% load or above 470uF high frequency low resistance electrolytic capacitor, otherwise the output ripple will rise.

Input Specification

Stand-by Consumption	0.1 W(TYP)	
Input Filter	π filter	
Input Under-Voltage Protection	Typ:7VDC PFD20-18SXXA3 Input	
	Typ:13VDC PFD20-36SXXA3 Input	
CTRL*	Module turn-on	CTRL suspended or TTL high level (2.5-12VDC)
	Module turn-off	CTRL connect to GND or low level (0-1.2VDC)
	Input current when switched off	2mA (TYP)

Note: *The voltage of CTRL pin is relative to -Vin pin.

Output Specification

Output Voltage Accuracy	Full voltage full load	Vo	≤±2.0%
Voltage Regulation	Nominal load, full voltage range	Vo	≤±0.5%
Load Regulation	10% ~ 100% nominal load	Vo	≤±1.0%
Ripple & Noise	20M Hz bandwidth, 0~100% load	Vo	50mVp-p typ,100mVp-p max
Output Over-voltage Protection	120%~200%Vo		
Output Over-load Protection	110%~220%Io		
Output Short circuit Protection	Continuous, Self-recovery		
Dynamic Response	25% nominal load step change △Vo/△t	3.3V, 5V O/P	±5% typ , ±8% max /500us
		Others	±3% typ , ±5% max /500us
Output Voltage Adjustment	Have Adjustment Pin(Trim Pin) ±10%（Typ.）		
Turn-on delay time	Typical	100ms	
Output Turn-on Overshoot Voltage		≤10%Vo	

Guangzhou Aipu Electron Technology Co., Ltd reserves the copyright and right of final interpretation.

Note: * Ripple& Noise should be tested under the Parallel Line Test Method.

General Specification

Switching Frequency	Typical	280KHz
Operating Temperature	Refer to Temperature Derating Curve	-40℃ ~ +85℃
Storage Temperature	-	-55℃ ~ +125℃
Max Case Temperature	Within Operating Curve	+105℃
Relative Humidity	No condensing	5%~95%
Case Material	-	Aluminum Metal Case
Cooling Method	-	Free air convection
Isolation Voltage	Input to Output	1500Vdc ≤ 0.5mA / 1min
	Input/Output to Case	1000Vdc ≤ 0.5mA / 1min
Insulation Resistance	Input-Output, 500VDC	≥1000MΩ
Isolation Capacitance	Typical	1000 pF
MTBF	MIL-HDBK-217F@25℃	$2X10^5$Hrs
Product Weight	Average	18g

EMC Characteristics

Total Items		Sub Items	Test Standard	Class
EMC	EMI	CE	CISPR22/EN55032	CLASS B (see recommended circuit photo②)
		RE	CISPR22/EN55032	CLASS B (see recommended circuit photo②)
	EMS	RS	IEC/EN61000-4-3	10V/m Perf.Criteria B (see recommended circuit photo 2)
		CS	IEC/EN61000-4-6	3Vr.m.s Perf.Criteria B (see recommended circuit photo 2)
		ESD	IEC/EN61000-4-2	Contact ±6KV / Air ±8KV Perf.Criteria B
		Surge	IEC/EN61000-4-5	±2KV Perf.Criteria B (see recommended circuit photo 1)
		EFT	IEC/EN61000-4-4	±2KV Perf.Criteria B (see recommended circuit photo 1)
		Voltage dips, short interruptions and voltage variations immunity	IEC/EN61000-4-11	0%~70% Perf.Criteria B

A3 Packing Dimension(Without Heat Sink)

Guangzhou Aipu Electron Technology Co., Ltd reserves the copyright and right of final interpretation.

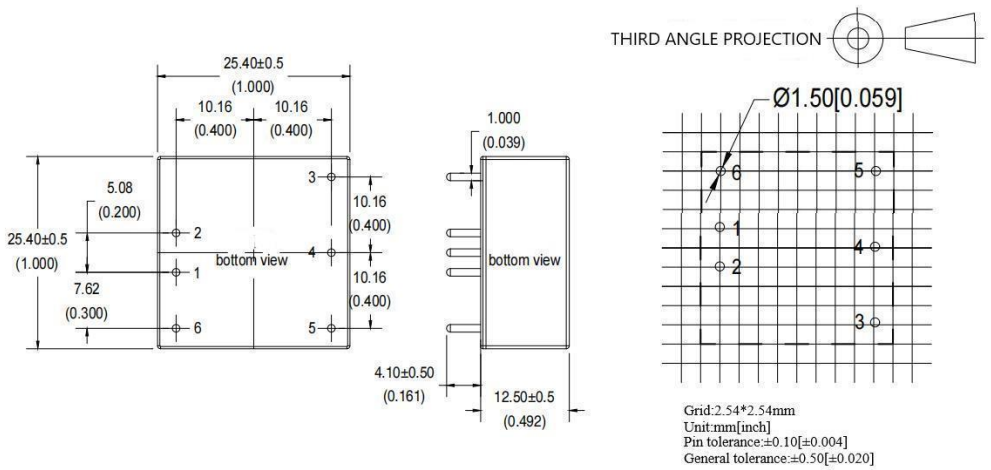

A3-H Packing Dimension(With Heat Sink)

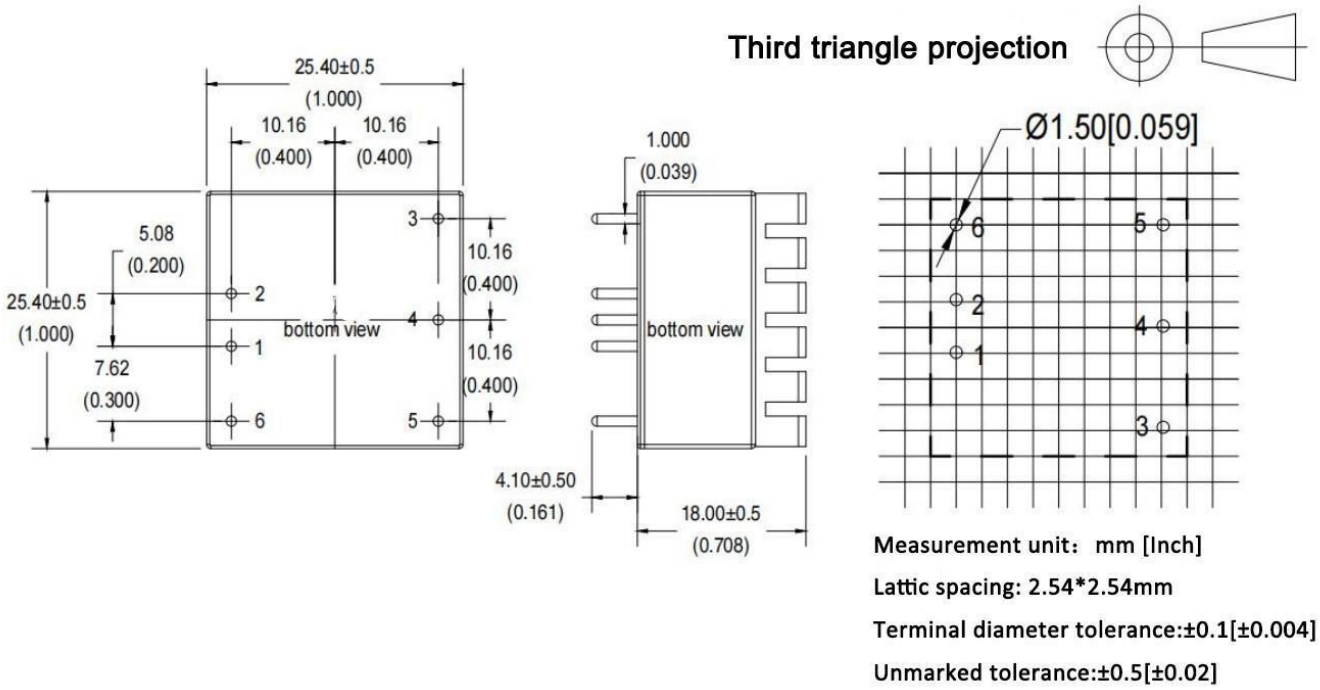

A3-T Packing Dimension(Without Heat Sink)

Guangzhou Aipu Electron Technology Co., Ltd reserves the copyright and right of final interpretation.

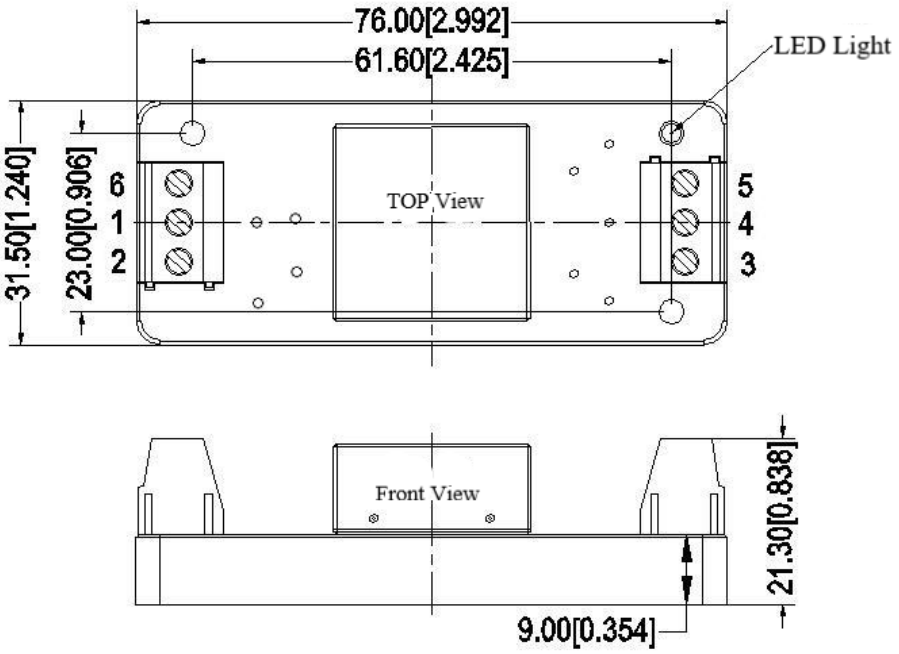

A3-TH Packing Dimension(With Heat Sink)

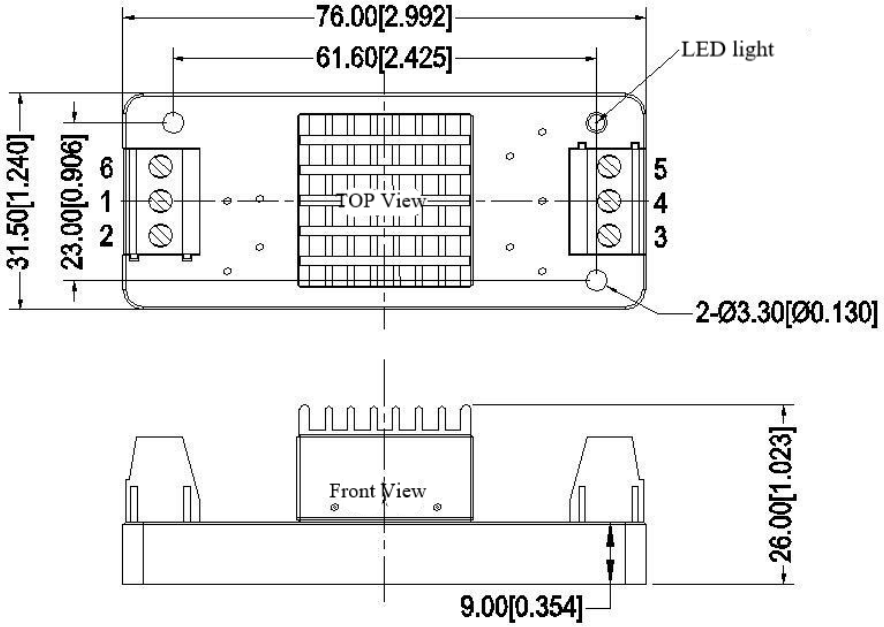

A3-TS Packing Dimension(Without Heat Sink)

Guangzhou Aipu Electron Technology Co., Ltd reserves the copyright and right of final interpretation.

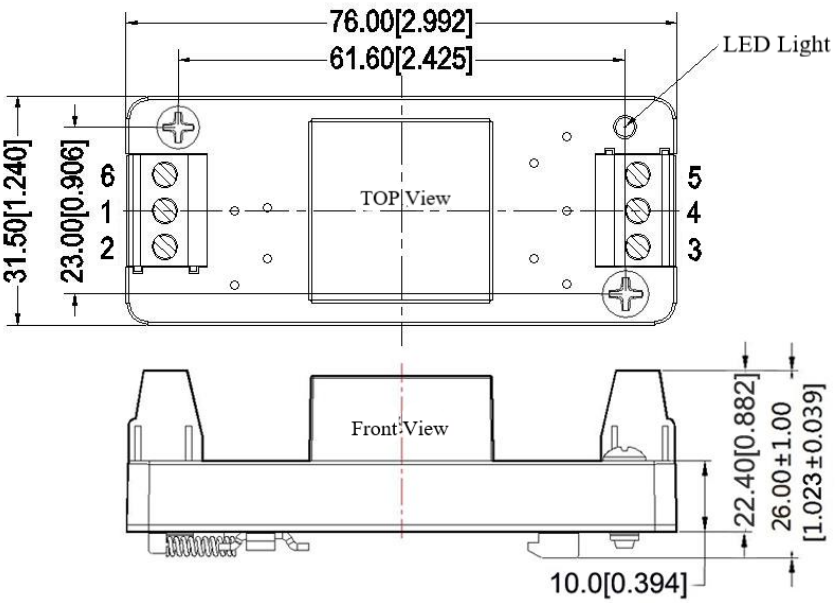

A3-TSH Packing Dimension(With Heat Sink)

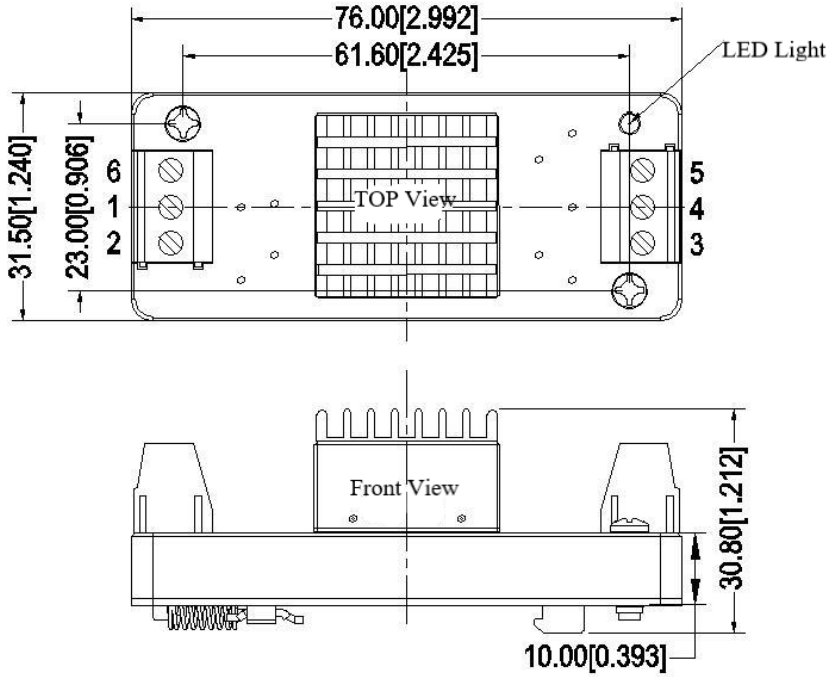

Packing Code	L x W x H
A3 (Without Heat Sink)	25.4X 25.4X12.5 mm
A3-H (With Heat Sink)	25.4X25.4X18.0mm
A3-T(Without Heat Sink)	76X31.5X21.3mm
A3-TH(With Heat Sink)	76X31.5X26.0mm
A3-TS (Without Heat Sink)	76X31.5X26mm
A3-TSH (With Heat Sink)	76X31.5X30.8mm

Guangzhou Aipu Electron Technology Co., Ltd reserves the copyright and right of final interpretation.

Pin Definition

PFD20-XXSXXA3	1	2	3	4	5	6
	-Vin	+Vin	+Vout	NP	GND	NP
PFD20-XXSXXA3C	1	2	3	4	5	6
	-Vin	+Vin	+Vout	NP	GND	CTRL
PFD20-XXSXXA3R	1	2	3	4	5	6
	-Vin	+Vin	+Vout	Trim	GND	CTRL
PFD20-XXSXXA3T	1	2	3	4	5	6
	-Vin	+Vin	+Vout	Trim	GND	NP

Ripple& Noise Test: (Parallel Line Test Method 20MHz bandwidth)

Test Method:

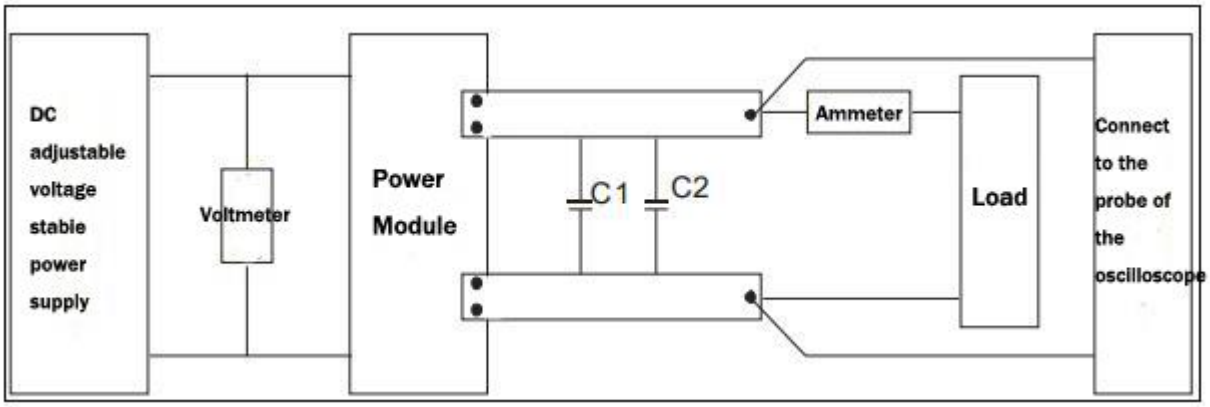

Note： C1=1uF;C2=10uF; the withstand value of the capacitor should be bigger the output voltage of the module.

Application Reference:

1.The recommended minimum load is 10% or above 470uF high frequency low resistance electrolytic capacitor, or output ripple will rise;

2.Recommend the unbalance loads of dual output to be ≤±5%;

Product characteristic curve

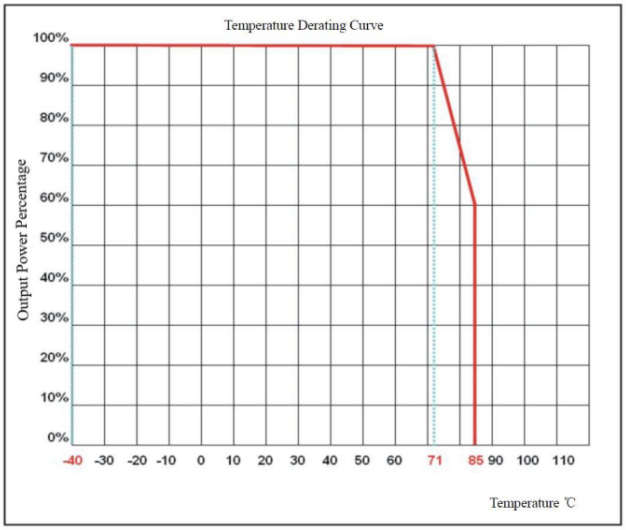

The use of Trim and the calculation of Trim resistance

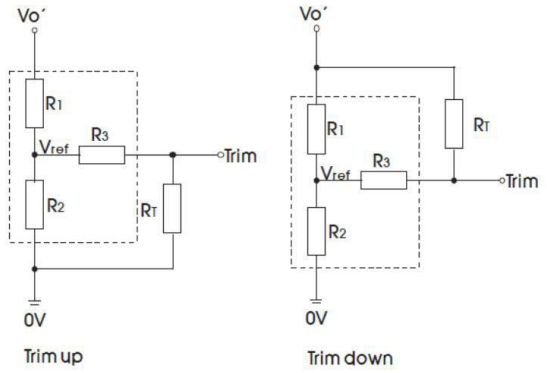

Calculating Trim resistor values:

up: $R_T = \frac{aR_2}{R_2 - a} - R_3$ $\quad a = \frac{V_{ref}}{V_o' - V_{ref}} \cdot R_1$

down: $R_T = \frac{aR_1}{R_1 - a} - R_3$ $\quad a = \frac{V_o' - V_{ref}}{V_{ref}} \cdot R_2$

RT= Trim Resistor value;
a= self-defined parameter, no actual meaning;
Vo' is the actula voltage to increas or desearse;

The circuit for Trim (The dashed area is the inside of product)

Vout(VDC)	R1(KΩ)	R2(KΩ)	R3(KΩ)	Vref(V)
3.3	4.22	2.55	18	1.25
5	5.1	5.1	20	2.5
9	9.31	3.58	24	2.5
12	18	4.75	33	2.5
15	18	3.6	30	2.5
24	30	3.48	30	2.5

Recommended circuit

1. DC/DC test circuit:

Normal recommended capacitors: C0:47-100uF; C1: 100uF.

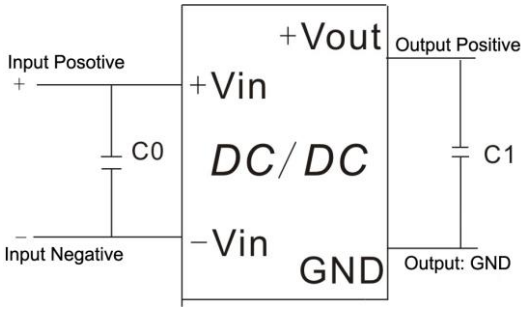

2. Input reflecting ripple current test circuit:

Capacitor C choose low ESR ones, withstand voltage value should be bigger than max input voltage;

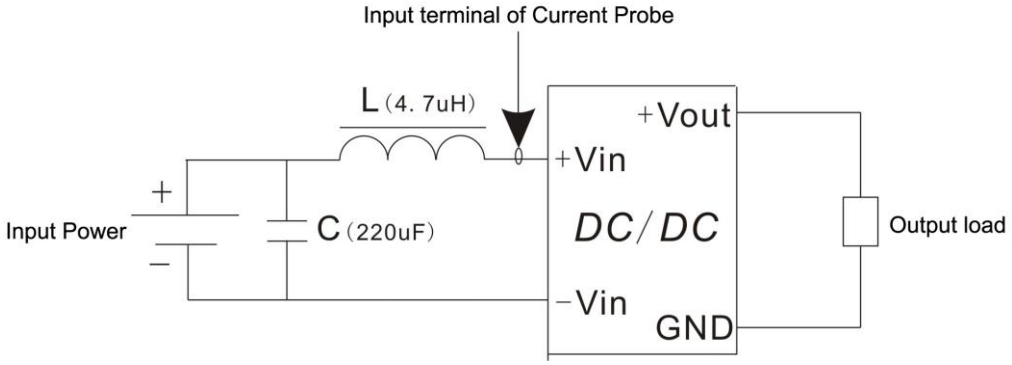

Guangzhou Aipu Electron Technology Co., Ltd reserves the copyright and right of final interpretation.

3. EMC external recommended circuit:

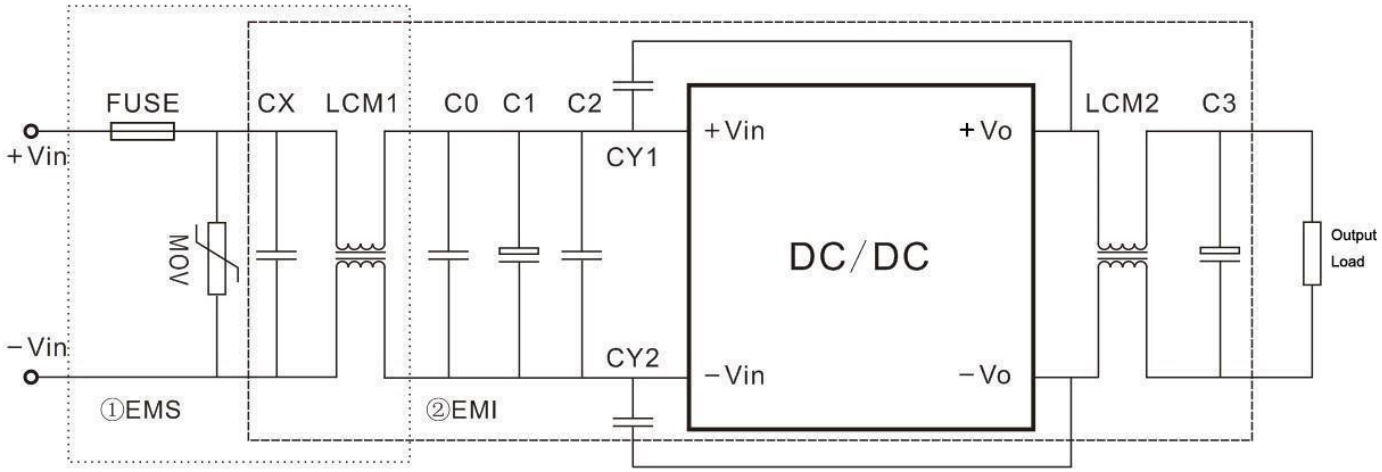

Recommended Spec:

Component	PFD20-18SXXA3(C)2 Input	PFD20-36SXXA3(C)2 Input
FUSE	According to customer's request	
MOV	14D560K	14D101K
CX	0.47uF	0.47uF
LCM1	5mH	5mH
C0	1uF/100V	1uF/100V
C1	470uF/100V	470uF/100V
C2	1uF/100V	1uF/100V
LCM2	30uH	30uH
C3	47uF/50V	47uF/50V
CY1,CY2	2.2nF/2000V	

Note:

1. The product should be used under the specification range, otherwise it will cause permanent damage to it.
2. If the product worked beyond the load range or below the minimum load, we cannot ensure that the performance of product is in accordance with all the indexes in this manual;
3. Unless otherwise specified, data in this datasheet should be tested under conditions of Ta=25℃, humidity<75% when inputting nominal voltage and outputting rated load(pure resistance load);
4. All index testing methods in this datasheet are based on our Company's corporate standards
5.The performance indexes of the product models listed in this manual are as above, but some indexes of non-standard model products will exceed the above-mentioned requirements, and please directly contact our technician for specific information;
6. We can provide customized product service;
7. The product specification may be changed at any time without prior notice.